Operating Manual

Series 1400
Trace Moisture in Argon Analyzer

Series 1400-A	**0-2 / 0-20 ppm Range, 115 V**
Series 1402-A	**0-2 / 0-20 ppm Range, 230 V**
Series 1400-C	**0-5 / 0-50 ppm Range, 115 V**
Series 1402-C	**0-5 / 0-50 ppm Range, 230 V**

March 2019
Rev. 5

READ INSTRUCTIONS BEFORE OPERATING

GOW-MAC®
INSTRUMENT CO.

277 Brodhead Road, Bethlehem, PA 18017-8600 U.S.A. Tel: (610) 954-9000

DISCLAIMERS

The information in this document is subject to change without notice. This manual could include technical inaccuracies or typographical errors. Changes are made periodically to the information herein; these changes will be incorporated in subsequent revisions of the manual. GOW-MAC® Instrument Co. reserves the right to make improvements and/or changes to the product(s) and/or programs described in this manual at any time and without notice.

All information referred to and/or included in this report is current as of the original issue date of this manual. GOW-MAC® Instrument Co. makes no warranty or representation with respect to the accuracy of the information or with respect to the suitability of the use of such information outside GOW-MAC® Instrument Co., nor does GOW-MAC® Instrument Co. assume responsibility for any injury or damage which may result, directly or indirectly, from the use of such information.

The warranties made by GOW-MAC® Instrument Co. with respect to the product are voided if the product is not used and serviced in accordance with the instructions in this manual.

Please protect yourself and your employees by following these operating instructions. We encourage our customers to write or call for any additional information relative to the use or repair of this instrument.

TRADEMARK AND PATENT INFORMATION

TERMS AND CONDITIONS OF SALE

WARRANTIES INSTRUMENTS SOLD BY GOW-MAC® INSTRUMENT CO. ARE WARRANTED FOR A PERIOD OF ONE YEAR AGAINST DEFECTS IN MATERIALS AND WORKMANSHIP. THE TERMS OF THIS WARRANTY ARE AS FOLLOWS:

1. The warranty period begins with the shipping date of the equipment to the original purchaser.
2. Certain parts such as batteries, fuses, lamps, etc., are expendable in normal use, and their service life is unpredictable. Such items are not covered by this warranty.
3. All requests for service or repair under this warranty must be received within the warranty period by GOW-MAC® or its authorized representative. All repairs are made at GOW-MAC plants or at the office of authorized representatives.
4. All repairs, adjustments, and other service under this warranty shall be performed free of charge to the purchaser. However, warranty service and repairs shall be limited to equipment malfunctions which, in the opinion of GOW-MAC®, are due or traceable to defects in original materials or workmanship. Instrument malfunctions caused by abuse or neglect of the equipment are expressly not covered by this warranty.
5. Instrument parts which have been repaired or replaced during the warranty period are themselves warranted only for the remaining unexpired portion of the original one year warranty.
6. Repairs, adjustments, and service performed after expiration of the one year warranty period shall be charged to the purchaser at the then current prices for parts, labor, and transportation.
7. This warranty attaches to the equipment itself and is not limited to the original purchaser. Unexpired portions of the warranty are thus transferable to subsequent owners.
8. GOW-MAC® expressly disclaims any liability to users of its products for consequential damages of any kind arising out of or connected with the use of its products.
9. Except as stated in Sections 1 through 8 above, GOW-MAC® makes no warranty, expressed or implied (either in fact or by operation of law), statutory or otherwise; and, except as stated in Sections 1 through 8 above, GOW-MAC® shall have no liability under any warranty, expressed or implied (either in fact or by operation of law), statutory or otherwise.
10. Statements made by any person, including representatives of GOW-MAC® which are inconsistent or in conflict with the terms of this warranty shall not be binding upon GOW-MAC® unless reduced to writing and approved by an officer of the Company.
11. This warranty shall be governed by the laws of the Commonwealth of Pennsylvania.

LIABILITY Buyer assumes all responsibility for warning and protecting its employees and independent contractors with respect to all hazards to persons and property in any way connected with the Equipment and the use thereof. Seller's liability for any claim of any kind hereunder, whether or not based on contract, tort (including negligence), strict liability, warranty, or any other grounds, shall not exceed the purchase price of the Equipment or the portion of the purchase price attributable to any part or parts of the Equipment in respect to which such claim is made. Seller shall not be liable for any special, indirect, incidental, or consequential damages. Without limiting the generality of the foregoing, Seller shall have no liability with respect to the results obtained by use of the Equipment, whether in terms of product condition, operating cost, general effectiveness, success or failure, or regardless of any statement made in any written proposal submitted by Seller. It is expressly understood that any technical advice furnished by Seller with reference to the Equipment is given gratis and Seller assumes no obligation or liability for the advice given or results obtained, all such advice being given and accepted at Buyer's risk. Each party hereby agrees to indemnify and hold the other party harmless from any actions, lawsuits, demands, claims, losses, expenses, costs, including but not limited to legal fees, and damages arising from the injury, illness or death of the indemnifying party's employees in any way related to the Equipment, whether or not such injury, illness, or death is claimed to have been caused by, resulted from, or was in any way connected with the negligence of the party to be indemnified.

PROPRIETARY INFORMATION Buyer agrees to maintain all proprietary information disclosed by Seller, including such proprietary information obtainable upon examination of the Equipment, in confidence and to refrain from any disclosure thereof to any third party (including any affiliate of Buyer), for any purpose, without the prior written consent of Seller. Buyer agrees to use said proprietary information solely for purposes of maintaining and operating the Equipment, and to refrain from any use thereof to design, construct, have constructed and/or operate any duplication or modification of the Equipment, or from any other use thereof, without the prior written consent of Seller.

IMPORTANT INFORMATION

These instructions are written for personnel operating the GOW-MAC® Trace Moisture in Argon Analyzers, Series 1400-A, and 1400-C. Read and understand the safety precautions in this manual to become familiar with the safe practices for operating this equipment.

Dangers, Warnings, Cautions, and Notes
Dangers, Warnings, Cautions, and Notes appear throughout this manual. A sample of each statement appears below. Within each sample, a definition of the statement type and its purpose is given.

DANGER
!

DANGERS alert you to an immediate hazard that causes serious injury or death and requires special precautions to be taken.

!
WARNING

WARNINGS alert you to a potential hazard that causes serious injury or death *under certain conditions.*

CAUTION

CAUTIONS alert you to a non-immediate or potential hazard or an unsafe practice that presents a minor threat of personal injury or damage to equipment, data, or processes.

NOTE

NOTES emphasize or remind you of an important piece of information.

Table of Contents

1
SAFETY

NOTE

This chapter contains information to promote safety in the operation and maintenance of this equipment. It is not intended to supersede, replicate, or replace any safety documentation or procedures provided from or established by official safety sources.

WARNING

Do NOT operate the GOW-MAC® Series 1400-A or-C Trace Moisture Analyzers (referred to in this manual as the Series 1400) until you read and understand the operating, maintenance, and safety instructions included in this manual.

All persons involved with the operation of this equipment including plant engineering, operations, and management-must understand the potential hazards involved, and know and observe all required safety precautions.

Your safety and the safety of equipment, nearby facilities, and personnel require a proper safety attitude and emphasis on safe work procedures. This is the essence of any good safety program. If at any time you identify safety deficiencies, immediately correct them and bring them to the attention of management.

Before an accident can be prevented, it must be anticipated. Use pre-job discussions with your coworkers and supervisors to identify hazards and the means to avoid them. At your facility, various gases may exist in liquid and/or gaseous states. Familiarize yourself with the hazards associated with each gas found at your facility.

NOTE

Read and understand the Material Safety Data Sheets (MSDS) for the materials used with this equipment. All personnel who work in the vicinity of this equipment should read, understand, and follow all safety information contained in the MSDS, in addition to following all government and facility safety regulations.

WARNING

Never introduce gases other than argon into the analyzer. If explosive, flammable, or corrosive gases or gas mixtures are allowed to flow into the analyzer, fire or explosion can result. This analyzer is not designed to be used in hazardous areas.

1.1 Emergency Procedures

The Series 1400 is designed to operate safely, efficiently, and reliably. However, as with any analytical equipment involving gases, an emergency can occur at any time. The emergency response could involve calling for medical assistance, management notification, fire assistance, or evacuation from the vicinity of the analyzer. **Obtain the following phone numbers and post them at the site telephone locations.** Periodically review the numbers and update them as required.

EMERGENCY PHONE NUMBERS			
Ambulance	(	)	_____
Fire Department	(	)	_____
Sheriff or Police Department	(	)	_____
On-Site Operations Representative	(	)	_____

Training and education are the most important parts of any safety program. For every possible emergency, establish an Emergency Response Plan and maintain it for immediate use.

1.2 Basic Safety Requirements

The following safety guidelines apply at all times when working with the Series 1400:

- **Prevent electrical shock —** Unplug and remove the AC power cord from the rear panel before opening and working on the analyzer. Use tools designed for work on electrical equipment.

- **Prevent injury —** Always wear safety glasses and appropriate safety protection. Ensure that all tools and instruments used during installation and maintenance are in good condition. Be aware that high-velocity gas may be released at vents and safety relief valves.

- **Follow posted precautions** — Read all precautionary labels attached to the equipment. Be sure to read all cylinder labels and warnings. Comply with all precautions before handling the equipment.

Situations may develop for which no written procedures exist. Think carefully before acting. Know the function of each valve and switch, and its effect on the equipment. Carefully review all operating procedures before starting up this equipment to ensure knowledge and understanding.

1.3 Precautionary Labels

WARNING

To avoid serious injury, read all precautionary labels attached to equipment, cylinders, containers, and boxes prior to startup.

Labels attached in appropriate areas of the analyzer warn you of inherent hazards associated with the system. For personal safety, read the labels and perform directed precautions **before** handling the equipment.

1.4 Summary of Known Hazards

This equipment is designed to minimize your exposure to the process gases and other known hazards. Read and thoroughly understand all safety aspects of this system and its operation before operating or maintaining the equipment.

1.4.1 Electrocution

DANGER !

Do NOT operate the analyzer without the cover secured in place. The output of the high-voltage transformer and the analytical cell electrodes can approach voltages of 6,000 VAC. To guard against electrical shock and possible electrocution, the analyzer should be serviced <u>ONLY</u> by a GOW-MAC service technician.

Adherence to the following guidelines helps guard against electrical shock:

- For safety and proper performance, this analyzer must be connected to a properly grounded three-wire source of electrical power.
- Tampering or unauthorized substitution of components may adversely affect the safety of this instrument. Use only factory-approved components for repair.
- Before checking or replacing any chassis component, turn off the power and remove the AC power cord from the rear panel.

1.4.2 Pressure

DANGER !

Mishandling of gas cylinders could result in death, serious injury, or property damage. Handle and store gas cylinders with extreme care and in accordance with manufacturer's instructions.

Sudden or uncontrolled release of pressurized gas can cause serious injury. The hazards of high pressure can be avoided through careful inspection and handling of cylinders and equipment with proper regulation. Read and understand the MSDS for the process gases used before operating this analyzer. For more detailed information on the precautions and safe practices to follow when handling cylinders, obtain and read CGA pamphlet P-1, *Safe Handling of Compressed Gases in Cylinders.*

1.4.3 Purging

It is ***essential*** that the system be thoroughly purged with purified Grade 5 Ultra High Purity (UHP) argon to remove all air and moisture from the sample lines **PRIOR** to turning the instrument "on". Air and moisture in the sample lines can cause ozone emissions, as well as inaccurate calibration and analysis results. The length of time necessary to purge the system depends on your individual application. Variables include ambient humidity and temperature, gas purity, and length of sample lines. The **minimum** purge period is 12 hours.

! WARNING

Equipment damage may result if the analytical cell in this unit is exposed to excessive pressure, causing it to break or shatter. To prevent this, never exceed 10 psig on the analytical cell.

Do not remove the flow control orifice from the sample inlet of the analyzer.

Do not exceed 10 psig at the sample inlet. Do not block the vent.

A flow control orifice in the analyzer's sample inlet port regulates flow and pressure to the analytical cell. With the orifice in place, a maximum inlet pressure of 10 psig is allowable.

Follow applicable safety precautions to ensure that an oxygen-deficient atmosphere is not created in the work area. Use low parts per million (ppm) moisture in argon gas with proper regulation to avoid contaminating the sampling system.

1.5 Safe Repair Procedures

Any repair work must be performed by a GOW-MAC service technician.

Analyzer manifold purging must be performed by experienced personnel.

Ventilate working area to prevent any leaking supply gas from accumulating.

Vent all gases to the outside.

Vent all pressure relief valves out of enclosed areas. Piping must be properly sized to allow safety devices to operate according to specifications.

De-pressurize supply gas piping before working on it.

1.6 General Precautions for Handling and Storing High Pressure Gas Cylinders

Compressed gases have properties that can cause serious accidents, injuries, and even death if proper precautions and safety practices are not followed. Therefore, during handling and use of these gases, be certain to use applicable safety precautions described by your local compressed gas supplier, the Compressed Gas Association, and/or O.S.H.A. regulations.

1. Read the label on all cylinders **BEFORE** using to identify the cylinder contents. If the label is illegible, return the cylinder to the supplier. **DO NOT ASSUME THE CONTENTS.**

2. Secure cylinders in storage and in use to an immovable structure to prevent accidental falling or movement. Read the relevant safety codes.

3. Store or move cylinders ONLY in the vertical position. **DO NOT** move or transport cylinders with regulators attached.

4. Store cylinders in a well ventilated area away from heat or ignition sources.

5. When installing tubing, provide ONLY approved, adequate pressure reducing regulators and pressure relief devices to prevent over-pressurizing of tubing and equipment.

6. Never drop cylinders or permit them to strike each other violently.

7. Cylinders may be stored in the open but, in such cases, should be protected against extremes of weather and from damp ground (to prevent rusting). In areas where extreme temperatures are prevalent, store cylinders in the shade.

8. The valve protection cap should be left on each cylinder until cylinder has been secured against a wall or bench, or placed in a cylinder stand and is ready for use.

9. Avoid dragging, rolling or sliding cylinders even for a short distance. Move cylinders by using a suitable hand truck.

10. Never tamper with safety devices in valves or cylinders.

11. Do not store full and empty cylinders together. Serious suck-back can occur when an empty cylinder is attached to a pressurized system.

12. No part of a cylinder should be subjected to a temperature higher than 52 °C (125 °F). Do not permit flame to come in contact with any part of a compressed gas cylinder.

2
PRINCIPLE OF OPERATION

2.1 General

The GOW-MAC® Series 1400 Trace Moisture Analyzer measures trace amounts of moisture in argon. Two separate Series 1400 models cover different analytical ranges:

115 V Models
Series 1400-A..... 0-2 / 0-20 ppm
Series 1400-C .... 0-5 / 0-50 ppm

230 V Models
Series 1402-A .... 0-2 / 0-20 ppm
Series 1402-C .... 0-5 / 0-50 ppm

Various applications include:

- Air separation plants
- Argon Purification Plants
- Specialty Gas Laboratories
- Specialty Steel Manufacturing
- Gas Management/Monitoring Systems
- Quality Control for Truck Fills & Gas Cylinders
- Process Control
- New Line Certification
- Chemical Plants
- Welding Gas Management
- Semiconductor Manufacturing

2.2 Specifications

Measurement Ranges for Impurities in Ar	0 - 2 ppm H_2O in Ar 0 - 20 ppm H_2O in Ar 0 - 5 ppm H_2O in Ar 0 - 50 ppm H_2O in Ar
Sample Flow Required	2.0 cfh
Ambient Temperature Limits	60 - 95 °F (16 - 35 °C)
Maximum Pressures	10 psig at sample inlet < 10 psig on analytical cell
Nominal Sample Inlet Pressure	8-10 psig
Power Required	~100 W, 120 or 230 VAC, 50/60 Hz
Output	4 - 20 mA or DC voltage Dry Contacts for Range Selection Indication Dry Contacts for Over Range Indication
Sample Connections	1/4” VCR® sample inlet; 1/4” Swagelok® vent
Sensitivity	± 0.01 ppm H_2O in Ar (Series 1400-A / 1402-A) ± 0.10 ppm H_2O in Ar (Series 1400-B / 1402-B)
Accuracy	± 0.02 ppm H_2O in Ar on 0-2 ppm range ± 0.25 ppm H_2O in Ar on 0-20 ppm range ± 0.05 ppm H_2O in Ar on 0-5 ppm range ± 0.55 ppm H_2O in Ar on 0-50 ppm range

Dimensions	5.25” H x 16.625” W x 14.625 D (13.34 cm H x 42.23 cm W x 37.15 cm D)
Weight	25 lbs (11.3 kg)

IMPORTANT

For proper operation of the analyzer it is ESSENTIAL to use the proper calibration standard for the range being used. Please refer to the list below.

Required **Calibration Gases for Argon Models**	*For 0 - 2 ppm range:*	zero gas:	UHP Argon (99.999%) w/ GOW-MAC Model 75-800-2-AR Noble Gas Purifier
		span gas:	1.60-2 ppm H_2O in Ar
	For 0 - 20 ppm range:	zero gas:	UHP Argon (99.999%) w/ GOW-MAC Model 75-800-2-AR Noble Gas Purifier
		span gas:	16-20 ppm H_2O in Ar
	For 0 - 5 ppm range:	zero gas:	UHP Argon (99.999%) w/ GOW-MAC Model 75-800-2-AR Noble Gas Purifier
		span gas:	4-5 ppm H_2O in Ar
	For 0 - 50 ppm range:	zero gas:	UHP Argon (99.999%) w/ GOW-MAC Model 75-800-2-AR Noble Gas Purifier
		span gas:	40-50 ppm H_2O in Ar

Gaseous Standards

Accurate calibration is best achieved by the use of a certified permeation tube. To calibrate over a selected range of the instrument, a calibration gas flow with H_2O from a permeation tube with a rate of 80% of full range should be utilized.

When a stable zero baseline is obtained, adjust calibrated flow from permeation tube to produce an output of 1.60 ppm to SPAN the instrument. Linearity within a 2% range should be exhibited up to 1.60 ppm.

2.3 Principle of Operation

Refer to Figure 2-1. A sample stream of refined argon passes at a constant flowrate through a glass analytical cell to which metal electrodes are attached. The electrodes are connected across a high-voltage transformer that provides a silent electrical discharge to ionize the gas in the cell, causing it to glow. The high-voltage transformer takes the signal from a 255 Hz power supply and steps it up to the high-voltage ionization level at 255 Hz. The gas ionizes on both halves of the voltage cycle producing an output frequency of 510 Hz. If moisture is present, it adds to the spectrum of light generated. This light is optically filtered so that only a single emission line in the moisture spectrum (308.9 nm in OH radical) can pass through. The resultant light is detected by a photomultiplier. Its light intensity is proportional to the moisture content in the argon gas stream.

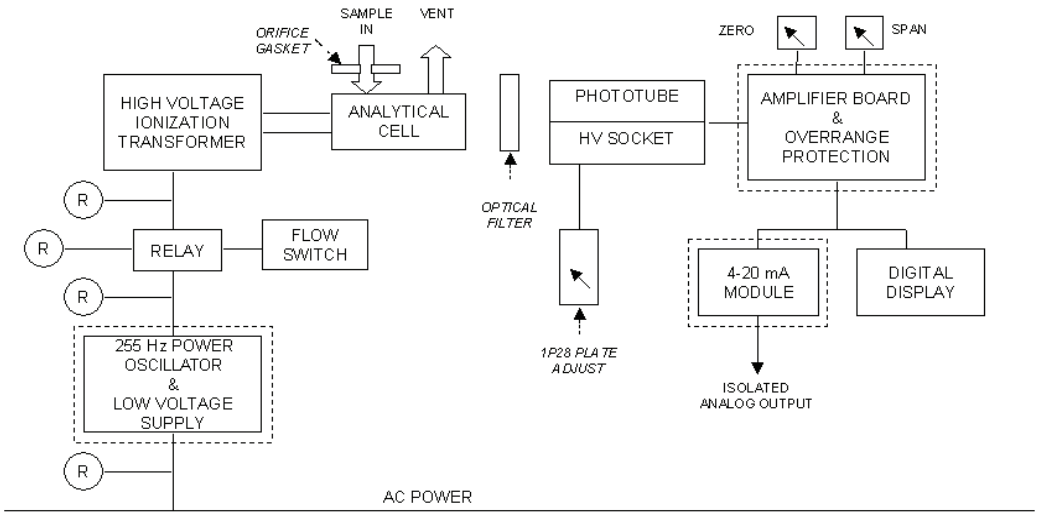

Figure 2-1: Block Diagram for Series 1400

A Hamamatsu high-voltage socket is used for the photomultiplier tube (PMT). It contains the resistor ladder for the intermediate dynodes in the PMT and a 1.22 VDC reference voltage generator. The socket works with a potentiometer, labeled “1P28 Plate Adjust” on the back of the analyzer, to provide proper plate voltage to the PMT.

The signal from the photomultiplier tube is processed in the amplifier board. The amplifier compensates for the selected measurement range, filters out line frequency interference, demodulates the signal, and converts it to a 0-100 mV output to drive the digital panel meter and the analog output module.

2.3.1 Overrange Protection

If the water content approaches 1000 ppm, the overall content of light from the plasma discharge decreases considerably. At about 2 percent water, the ionization is completely extinguished. This effect causes the PMT output to decrease, resulting in a signal that looks like no moisture is present in the argon sample, when in fact the content is greater than 1000 ppm.

The *Overrange Protection Circuit* in the Series 1400 is a photodiode that detects the ionization glow and generates a warning when the intensity of the emission signal is low. It is set to trip the warning alarm when the moisture concentration reaches the 1000 ppm level. The overrange alarm on the front panel illuminates when this alarm is generated. No sound is generated.

2.4 Description of Components

2.4.1 Front Panel Components

Operating controls are located on the front panel of the Series 1400, as shown in Figure 2-2.

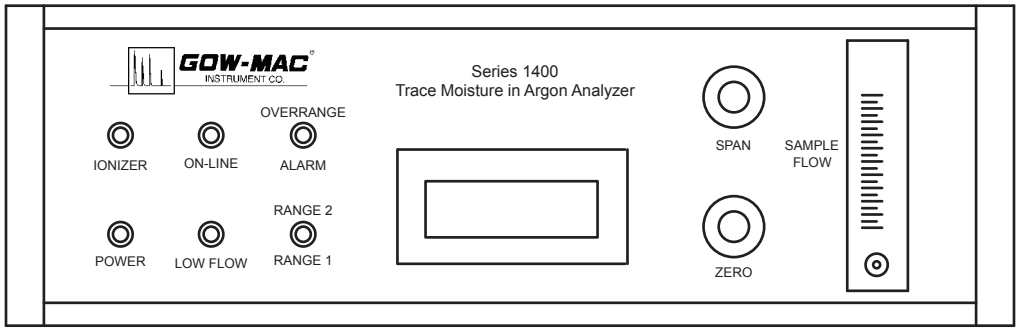

Figure 2-2 Series 1400 Front Panel Components

Ionizer Light — Illuminates when the 255 Hz power supply is operational.

Power Light — Illuminates when main power switch is on and the fuse is good. Switch and fuse are both located in the power entry module on the back of the analyzer.

On-Line Light — Illuminates when ionizing voltage is applied to the analytical cell. The analyzer requires a sample flow of at least 0.5 scfh for the analytical cell to come on line.

Low Flow Light — Illuminates when flow to the analyzer is less than 0.4 scfh. When the Low Flow Light is on, the ON-LINE light will be off indicating that no ionizing voltage is being applied to the analytical cell.

Overrange Alarm Light — Illuminates when discharge brightness deteriorates due to an unusually high level of impurity in the sample gas. The DPM (Digital Panel Meter) indicates a low level impurity analysis in this mode.

Range Switch — Used to select between Range 1 and Range 2. Example: for Model 1400-A, Range 1 is 0-2 ppm and Range 2 is 0-20 ppm.

Digital Panel Meter (DPM) — Displays the moisture content of the sample stream in ppm. *Note*: When there is no sample flow or there is a loss of ionization voltage, or when the impurities are out of range (i.e., > 2 ppm in the 2 range, > 20 ppm in the 20 range, > 5 ppm in the 5 range and > 50 ppm in the 50 range), the DPM presents “EEEEEE” across the display.

Zero Potentiometer — Used for calibration with zero gas.

Span Potentiometer — Used for calibration with span gas.

Sample Flow Rotameter — Monitors flow rate of gas to the analytical cell.

NOTE

The sample rotameter is calibrated and marked for AIR, not argon. To get an accurate, direct reading of actual argon flow, please use the Sample Rotameter Correction curve in Appendix B to convert between ACTUAL and INDICATED flow rates. All sample and purge gas flow rates specified herein are ACTUAL argon flows.

2.4.2 Rear Panel Components

Connections and other controls are located on the rear panel of the analyzer, as shown in Figure 2-3.

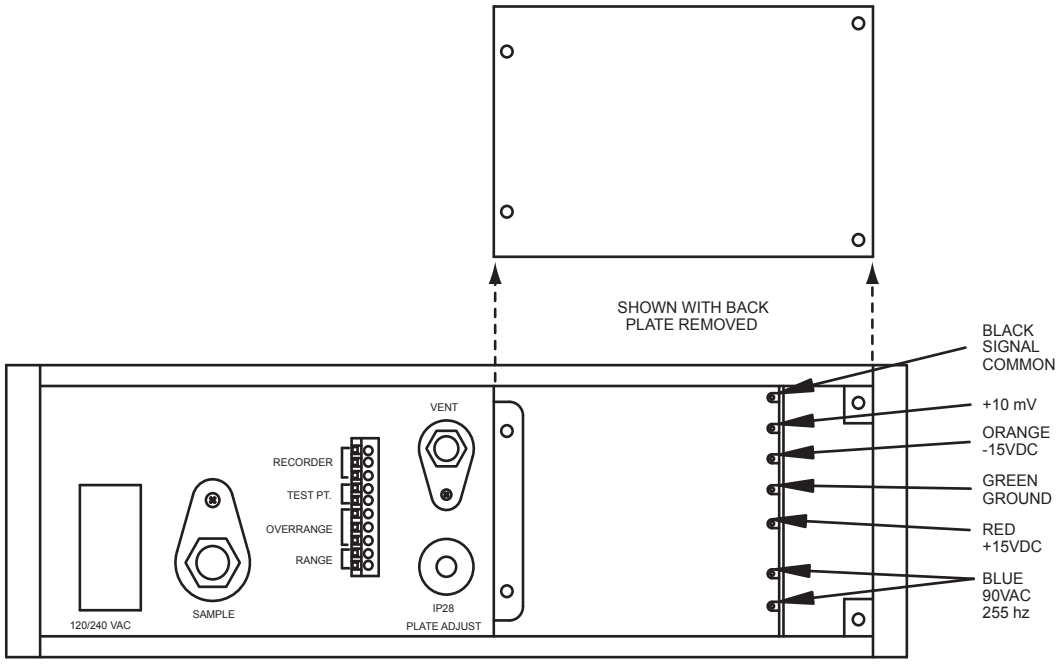

Figure 2-3 Series 1400 Rear Panel Components

Power Entry Module — Main power on/off function, connector for input power cable, and fuse holder for the analyzer. Protects analyzer from input power surges and power supply from short.

Sample Input Port — 1/4-in (0.64 cm) VCR fitting marked INPUT. Used to connect the sample inlet line to the analyzer.

Sample Vent Port — 1/4-in (0.64 cm) Swagelok® compression fitting marked VENT. Used to connect the sample outlet line to the vent system.

1P28 Plate Adjustment — 10-turn, 10 K variable plate voltage adjustment for the high voltage applied to the plates of the PMT by the high-voltage DC power supply.

Identification Plate — Shows model #, serial #, range, etc.

Test Points — Test jacks used to test the voltage outputs of the amplifier board, the low-voltage power supply, and the 255 Hz power supply.

* Note: A fuse must be used for any circuit attached to the overrange alarm or range indication contacts.

Green Terminal Block— Standard barrier terminal connection for a recorder or external meter to the analyzer.

Recorder Contacts — 4-20 mA Output

Test Point Contacts — mVDC output signal connector for a DC multimeter, used during calibration.

Overrange Alarm Contacts* — Normally open and normally closed dry contacts for indication of impurities at levels too high for analyzer's range of detection. Rated for 0.5 A at 30 VAC.

Range Indication Contacts* — These contacts are closed when the lower range is selected on the front panel of the analyzer and open for the high range. Rated for 2 A at 30 VAC.

3
INSTALLATION

CAUTION

Installation of the Series 1400 can involve potentially hazardous procedures. Only trained and qualified personnel who have read and who understand the instructions in this manual shall install the Series 1400.

3.1 Unpacking and Inspection

Carefully remove the analyzer from the shipping container and visually inspect it for damage. Maintain it in an upright position and avoid jarring. Ensure the power cord and calibration data sheets are included and that all components ordered have been either supplied or back-ordered.

If any items are missing or the analyzer appears damaged, immediately notify GOW-MAC® at (610) 954-9000. Remove and discard caps from fittings; inspect the analyzer for loose fittings or connections

Fill out and return the yellow WARRANTY-REGISTRATION card (included in this manual) to ensure that the WARRANTY will be validated and that you will be kept informed of any improvements or other items of interest.

3.2 Location

Locate the Series 1400 in a clean area free of:

- Excessive dust
- Excessive humidity
- Mechanical vibrations
- Strong electric or electromagnetic fields
- Corrosive gases
- The use of walkie-talkies or cellular phones

Choose a location where sudden temperature changes in excess of 10 °F (5 °C) do not occur and where the temperature does not exceed the specified ambient temperature range. Refer to Section 2.2. Avoid any location where the instrument would be exposed to direct sunlight or radiation from heaters.

CAUTION

This analyzer is designed for use in a general purpose area and is NOT rated for use in hazardous areas.

3.3 Mounting

Space and materials required:

- 5-1/4-inches (13.3 cm) of 19-inch rack space, as shown in Figure 3-1
- Service access space behind and in front of the analyzer.
- Metal bracket to support the rear side of the cabinet if the analyzer is installed in a cabinet without side support brackets.
- Eight mounting screws suited to the rack.

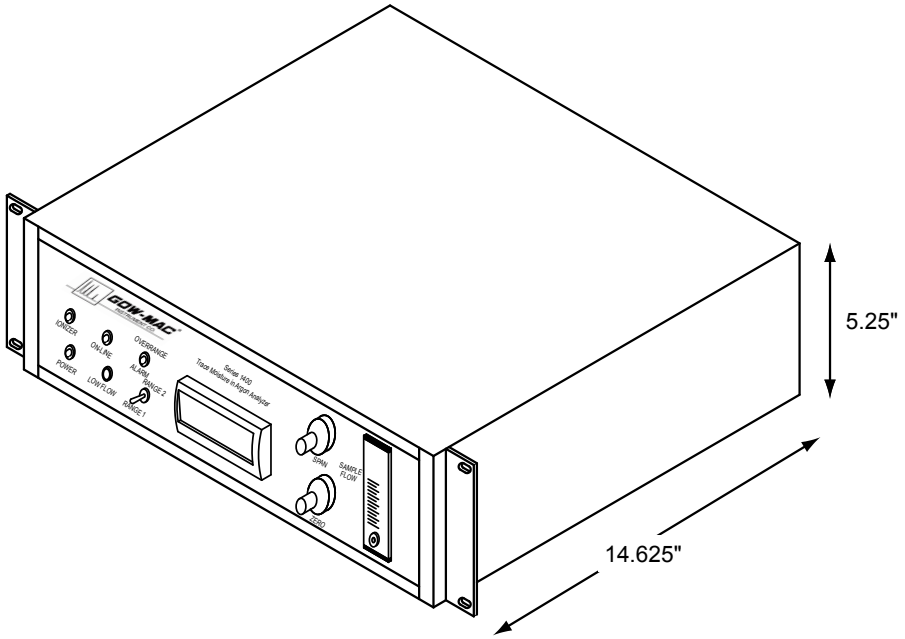

Figure 3-1: Series 1400 Analyzer Dimensional Drawing

3.4 Electrical Connections

Materials required:

- Power Cord
- Fuse(s) for Power Entry Module, if it is not configured for the power supply available. If necessary, refer to Chapter 5 for voltage selection and fuse changing instructions.

1. Ensure the Power Entry Module is set for the proper line voltage and contains the correct fuses. (See section 5.3.1.)

2. Ensure that the Power Switch located on the rear of the analyzer is in the **OFF** position.

3. Connect the AC power cord to the proper line voltage. This voltage must be stable, transient free, and have a stable frequency for optimum operation. Also, the unit must be properly grounded.

4. Connect the analog recorder output terminals to a recorder, if desired. The recorder output terminals are located on the terminal strip on the back of the analyzer.

3.5 Sample Manifold System

NOTE

Leakage of air into the sampling system causes erratic or unsatisfactory analyzer operation. Even if air is admitted into the system for only a few minutes, you must purge the regulator and the system with UHP argon for <u>at least twelve hours or overnight</u> before the readings stabilize.

The sample manifold system shown in Figure 3-2 allows you to switch the Series 1400 between zero or span calibrating gases and the plant gas streams quickly and efficiently without disconnecting the analyzer and introducing air in the system.

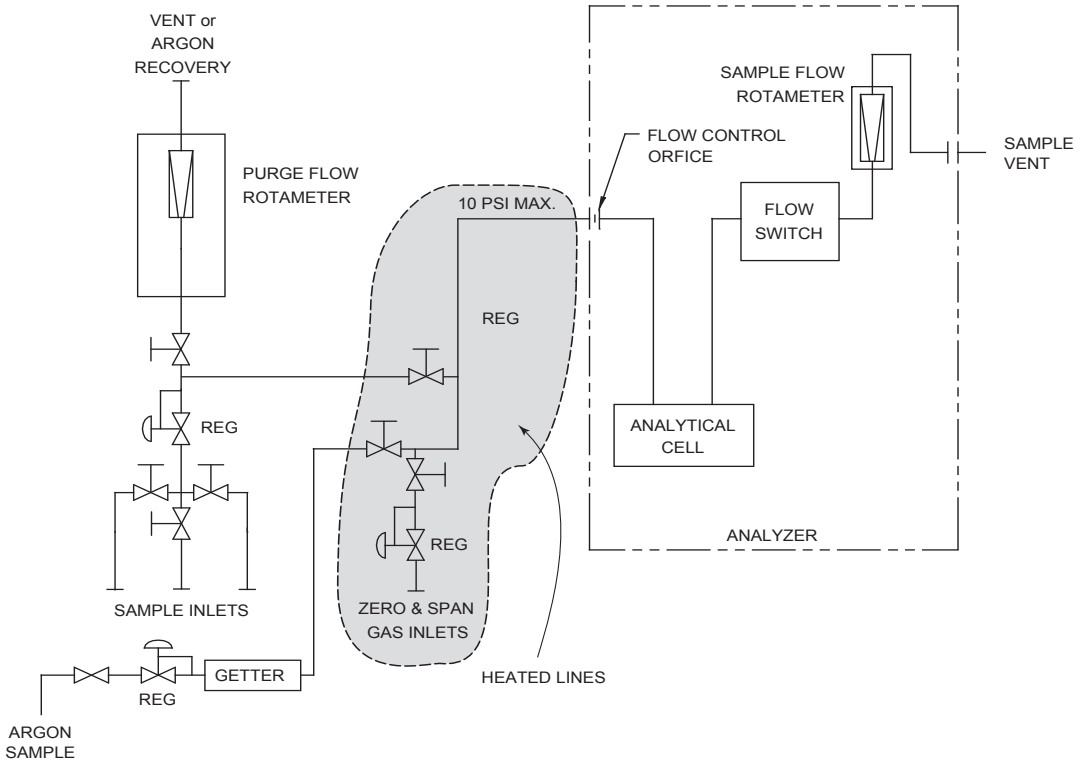

Figure 3-2: Typical Sample Manifold System for the Series 1400

NOTE

For best possible calibration, consideration should be made to heat, and control the temperature of, the calibration lines leading to the instrument.

The sample manifold system must be designed so that you can:

- Purge the sample line and pre-adjust the flow rate before admitting a sample to the analytical cell.
- Maintain a flow of argon through the analytical cell whenever ionization voltage is being applied.

Required or necessary items:

- Noble gas purifier is REQUIRED for the zero gas. Use GOW-MAC Model 75-800-2-AR.
- Manifolds are available from GOW-MAC to select sample, zero, and span gases. Select from the GOW-MAC A05-0011 family of manifolds. HIGHLY RECOMMENDED.

NOTE

Manifolds for moisture standard should be heated.

3.6 Gas Line Connections

WARNING

Equipment damage may result if the analytical cell in this unit is exposed to excessive pressure, causing it to break or shatter. To prevent this, never exceed 10 psig on the analytical cell.

Do not remove the flow control orifice from the sample inlet of the analyzer.

Do not exceed 10 psig on the sample inlet. Do not block the vent.

NOTE

Refer to section 3.5 for detailed information on the sample manifold system.

To connect the gas line:

1. Connect an unobstructed vent line to the 1/4-in (0.64-cm) Swagelok® Vent port on the rear of the analyzer.
2. Connect the inlet line from the sample manifold system, regulated to 10 psig, to the 1/4-in (0.64-cm) VCR® Input port on the rear of the analyzer.

3.7 Purging

A flow control orifice at the analyzer sample/zero inlet regulates flow and pressure to the analytical cell. With the orifice in place, a maximum inlet pressure of 10 psig is allowable.

CAUTION

Ozone emissions are possible if air or moisture is ionized in the sampling system. The sample path must be relatively free of air and/or moisture before applying the ionizing voltage.

Keep Series 1400 power OFF until the analyzer is fully purged.

When installing a new analyzer or starting up an analyzer that has been idle for a period of time, the sampling system should be purged for ***at least twelve hours*** (or overnight) with purified UHP argon to cleanse it of contaminants and water vapor.

Materials required:

Purge gas: UHP Argon (99.999% pure)
Purifier: GOW-MAC Model 75-800-2-AR Noble Gas Purifier

3.7.1 Purge Method

The exact purge method depends on the sample manifold design and construction. In general, each sample inlet line must be thoroughly purged. Sufficient purge time becomes critical when sample lines longer than 10 feet (3 m) are used.

CAUTION

It is essential that the system be thoroughly purged with purified Grade 5 Ultra High Purity (UHP) argon to remove all air and moisture from the sample lines PRIOR to turning the instrument "on". Air and moisture in the sample lines can cause ozone emissions, as well as inaccurate calibration and analysis results. The length of time necessary to purge the system depends on your individual application. Variables include ambient humidity and temperature, gas purity, and length of sample lines. The minimum purge period is 12 hours.

Keep the Series 1400 power *OFF* until the analyzer is fully purged.

NOTE

Do not purge long lines through the analytical cell. First, purge them through the purge flow rotameter; then transfer flow to the analyzer cell as suggested in step 6, below. This eliminates the possibility of contaminating the analytical cell and having to purge for an extended period to reach equilibrium.

Perform the following steps to purge the analyzer (refer to Figure 3-2):

1. Close all valves on the sample manifold.
2. Open the valve on sample inlet line to be purged and the purge rotameter valve.
3. Connect purge gas to the sample inlet line.
4. Adjust flow rate to 2.0 scfh at no more than 8-10 psig, as indicated on the purge rotameter, and purge for at least one hour.
5. Close the sample inlet valve, then repeat steps 2 through 4 to purge all other sample inlet lines.
6. After the last sample line and the zero and span gas inlet lines have been purged, close the purge rotameter valve, open the valve controlling flow through the analytical cell, and purge the analyzer with the sample flow rotameter set at 0.5 scfh. Purge the analyzer for a minimum of 12 hours with UHP argon.
7. If cylinder argon is used as a purge gas, reconnect the sample gas to sample manifold inlet.

3.8 Installation Checklist

After installing the system, confirm that:

1. Each gas line was purged for at least 1 hour prior to connection to the analyzer inlet.
2. The sample gas connection to the sample inlet port is not leaking.
3. No leaks exist between the span gas cylinder and the analyzer gas inlet port when span gas is flowing to the analyzer.
4. No leaks exist between the zero gas source and the analyzer gas inlet port when zero gas is flowing to the analyzer.
5. The vent tube connection has no leaks, has an unobstructed path to atmosphere, and is at least 1/4-in (0.64-cm) OD.

4
OPERATION

CAUTION

Operation of the Series 1400 involves potentially hazardous procedures. Only trained and qualified personnel who have read and who understand the instructions in this manual shall operate the Series 1400.

WARNING

Never introduce gases other than argon into the analyzer. If explosive, flammable, or corrosive gases or gas mixtures are allowed to flow into the analyzer, fire or explosion can result.

This analyzer is not designed for use in hazardous areas.

WARNING

Equipment damage may result if the analytical cell in this unit is exposed to excessive pressure, causing it to break or shatter. To prevent this, never exceed 10 psig at the sample inlet connection.

Do not remove the flow control orifice from the sample inlet of the analyzer.

Do not exceed 10 psig at the sample inlet. Do not block vent.

NOTE

Maintain a 1.5 scfh flow of zero gas through the analyzer when it is not in use (idle for more than 24 hours). This procedure is highly recommended in areas of high humidity. Take care to keep the inside of the instrument dry.

4.1 Powering the Analyzer

CAUTION

Ozone emissions are possible if air or moisture are ionized in the sampling system. The sample path must be relatively free of air and/or moisture before applying the ionizing voltage. Refer to Section 3.7.

Keep the Series 1400 power OFF until the analyzer is fully purged.

The Range switch on the front of the analyzer should be toggled to the desired measurement range prior to power-up and calibration.

NOTE

When changing measurement ranges, recalibration is necessary.

1. Purge the analyzer and sampling system as described in Chapter 3.
2. Turn on the analyzer by pushing the Power Switch to the ON position. The *POWER* light on the front panel turns on.
3. Sample flow is restricted by an orifice in the sample inlet connection. As the flowrate into the analyzer increases past ~0.5 cfh, the *ON-LINE* light turns on. This indicates that the flow switch is operating correctly.

WARNING

Equipment damage may result if the analytical cell in this unit is exposed to excessive pressure, causing it to break or shatter.

Do not remove the flow control orifice from the sample inlet of the analyzer.

4. Observe the digital panel meter, letting the instrument warm up until the readings stabilize. Drifting occurs until internal temperatures stabilize and the analytical cell is completely purged. A persistent drift indicates an improperly purged system or an air leak into the system. Refer to Chapter 5 for suggested corrective procedures.

4.2 Zero and Span Calibration

The Series 1400 is designed to provide a linear response over the 0-2/0-20 ppm or 0-5/0-50 ppm concentration range for moisture in argon. Therefore, a two-point (zero and span) calibration is sufficient to define the calibration curve for this analyzer.

Prior to shipment, the analyzer was calibrated by GOW-MAC® in accordance with the calibration data shipped with your analyzer. Use these settings to verify that the unit is in calibration, or recalibrate the analyzer as outlined in this section.

4.2.1 Before Calibration

NOTE

To minimize consumption of zero and span gases, careful attention to the purging of the analyzer, as described in Chapter 3, is critical.

1. Ensure that the analyzer is fully purged and warmed up.

2. Check that the sample/zero gas flow rate is 2.0 scfh, as indicated on the front panel flowmeter. The *LOW FLOW* light should not be illuminated. Adjust sample flow with pressure regulation on the sample inlet, applying a maximum of 10 psig.

4.2.2 Recommended Calibration Gases

Recommended zero and span calibration gases are specified in Section 2.2.

The first calibration point is fixed by a zero gas. The GOW-MAC® Model 75-800-2-AR Noble Gas Purifier is required for this.

The second point is fixed by a certified span gas normally supplied by a certified permeation tube. A permeation tube (of H_2O) and a calibrated gas flow should be utilized to create a span concentration equivalent to 80% of the full range to be calibrated.

4.2.3 Calibration Steps

NOTE

All zero, span, and sample gas should each be applied to the analyzer at the same flow rate, 2 scfh. Analyzer flow and pressure are restricted by a sample inlet orifice. Use a regulator and metering valve or mass flow controller at the sample, span, and zero gas source to adjust flow. Refer to Figure 3-2.

1. Set the ZERO potentiometer to 2.00 and SPAN potentiometer to 8.00. (If zero and span settings from a previous calibration are known, these may be used in place of 2.00 and 8.00.)

2. Connect a DC millivoltmeter across the Test Points on the rear panel Green Terminal Block.

NOTE

To preserve calibration accuracy, cylinder pressure for the calibration standard gases should not fall below 500 psig.

IMPORTANT

For proper operation of the analyzer it is ESSENTIAL to use the proper calibration standard for the range being used. Please refer to the list on page 16.

3. Flow span calibration gas to the analytical cell at a rate of 2.0 scfh.

4. **For 0-2 ppm range:** Adjust the plate adjustment potentiometer on the rear panel to 2-3 mVDC).

   For the 0-20 ppm range: Adjust the plate adjustment potentiometer on the rear panel to 2-3 mVDC).

   For 0-5 ppm range: Adjust the plate adjustment potentiometer on the rear panel to 2-3 mVDC).

   For 0-50 ppm range: Adjust the plate adjustment potentiometer on the rear panel to 2-3 mVDC).

NOTE

This is an approximate reading. This initial setting is changed only when some major part of the analyzer is changed or the 1P28 phototube becomes weak with age. Then the plate adjustment control may require additional adjustment to keep the analyzer calibrated. Contact GOW-MAC.

5. With span gas flowing at a rate of 2.0 scfh, and the output stabilized, adjust the SPAN potentiometer to obtain a reading on the panel meter equal to the span gas in ppm moisture.

6. Stop span gas and start flowing zero calibration gas to the analytical cell at a rate of 2.0 scfh. Wait approximately 30 minutes for the digital panel meter reading to stabilize. Adjust the ZERO potentiometer to obtain a reading on the panel meter of zero (0).

7. Repeat steps 6 and 7 until stable zero and span readings are obtained without further adjustments.

8. When calibration is complete, close the span and zero inlet lines, and record the settings of the ZERO, SPAN, and the plate adjustment potentiometers on your equipment calibration log. A sample equipment calibration log is given in *Appendix A* in the back of this manual for your convenience. Subsequent calibrations modify these settings, and you may find that a record of the changes is useful when troubleshooting analyzer problems.

4.3 Reading and Recording Data

CAUTION

The digital panel meter may indicate a negative value or display a constant "1" when high concentrations of moisture (≥ 0.1 percent) are present. No matter what the digital display indicates, an overrange alarm indicates high concentrations of moisture (≥ 0.1 percent) in the sample line.

On completion of the zero and span calibrations, the Series 1400 is ready to begin taking readings on the sample gas.

1. Open the valve of the desired sample inlet line.
2. Adjust the flow rate to 2.0 scfh.
3. If desired, connect a recorder to the recorder output connector on the back panel.
4. To proceed with an analysis of another sample line, close the valve of the current sample line, open the valve of the new sample line, and adjust the flow rate to 2.0 scfh.

4.4 1400 procedure (H2O in Argon)

Note: There should be a tubing manifold used to connect the calibration gasses to the instrument. It is recommended that the manifold be free of dead-legs and made of materials of which prompt the efficient transporting of moisture (H_2O).

Note: Make sure that the inlet pressure to the instrument is <10 psig.

1. Connect research grade Argon (6.0 Argon) or a purified Argon source as the zero / blending gas.
2. Connect a certified calibration gas (~18.6 ppm) of moisture in Argon as the Spanning Gas.
3. Make sure that the flow rate of zero / span gas through the instrument is at 700 mL/min. This is measured at the vent to the instrument using a portable meter or it is indicated as 2.0 on the front panel-mounted rotameter.
4. Connect a DC volt meter to the test points on the back of the instrument.
5. Switch the manifold so that the zero gas is flowing through the instrument.

6. Set the 1P28 pot on the back from 2 - 3 millivolts DC. Allow the voltage test point signal to stabilize for a minimum of 15 minutes. When the signal is stable readjust the voltage from 2 to 3 mv if needed and then lock the 1P28 pot.

7. Adjust the Zero Pot located on the front panel until the display on the front panel reads “00.00”. Wait to insure that the reading is stable.

8. Switch the manifold so that the Spanning gas is flowing through the instrument. Make sure that the flow rate is 700ml/min. Let the instruments reading stabilize fully.

9. Adjust the span pot located on the front panel so that the display reading on the front panel reads what your span moisture (H2O) concentration is. Wait a minimum of 15 minutes for the reading to stabilize. There may be longer waiting times needed due to the sample / spanning gas delivery system.

10. Once the reading is stable readjust the span pot located on the front panel as necessary. Wait to insure the reading is stable before moving to the next step.

11. Take note and or record the voltage reading on the multi-meter connected to the test point on the back of the instrument. The reading should be less than 400 mV DC.

12. Repeat steps (7) through (12) as needed until both readings are consistent.

Note: When calibrating, changing the gas from zero gas to the spanning gas, check to make sure that the voltage reading with zero gas introduced to the instrument is from 2 to 3 mV DC. When the spanning gas is introduced the voltage reading should not exceed 400 mV DC. These are measured after stability has been achieved.

4.5 Overrange Protection Circuit

The Overrange Protection Circuit has two main parts: 1) a photodiode that provides a signal proportional to the total light intensity from the analytical cell and 2) an alarm that takes action if the photodiode signal falls below a threshold value.

The Overrange Protection Circuit requires no adjustment other than the initial factory calibration. Even if the photodiode output shifts substantially, the Overrange Protection Circuit operates properly. No routine maintenance to this circuit is required, but the following test of the circuit is recommended after each scheduled analyzer calibration.

4.5.1 Functional Testing of the Overrange Protection Circuit

To test the Overrange Protection Circuit:

1. While the analyzer is running, shut off sample flow. The low flow switch cuts off the high voltage to the analytical cell, which causes the discharge to extinguish. The alarm circuitry should indicate an overrange condition.

2. The following events should take place:

   - The red overrange LED turns on and stays on

- The panel meter reads “1.” without any figures after the decimal point.
- The recorder output indicates a full-scale signal or slightly higher.
- The digital overrange contacts change state (NC to open or NO to closed)

If the above events do not occur, suspect a fault in the Overrange Protection Circuit and contact GOW-MAC® at (610) 954-9000.

5
MAINTENANCE AND REPAIR

CAUTION

Maintenance and repair of the Series 1400 involve potentially hazardous procedures. Only trained and qualified personnel who have read and who understand the instructions in this manual shall work on this equipment.

Routine maintenance helps ensure continuing high performance and reduces malfunctions that could lead to analyzer downtime.

5.1 Routine Maintenance Schedule

- Perform a **routine** calibration of the analyzer at least once every one to two weeks. Keep a log of the percentage zero and percentage span deviation settings. This ensures not only that accuracy is maintained, but it may help in troubleshooting the analyzer if these settings vary widely at each calibration or vary consistently up or down scale. If the readings are stable from calibration to calibration, then the frequency of routine calibrations can be decreased accordingly.

- Check the sample gas flow rate at least every one to two weeks. Use the rotameter on the front panel to check that the sample flow rate is approximately 2.0 scfh.

- Check for excessive accumulation of dirt. In dusty locations, you may need to wipe or gently blow off dust from the various sections at least once a week. Any accumulation of dust or oil film hinders satisfactory operation.

- On an annual basis, check the gas lines for signs of leaks.

Table 5-1: **Recommended routine maintenance for the Series 1400**

Calibrate Series 1400	Every 1-2 weeks
Check sample gas flow rate	Every 1-2 weeks
Check for excessive accumulation of dirt	1 time per week
Check gas lines for leaks	Yearly

5.2 Troubleshooting

DANGER !

- **High voltage. Electrocution hazard.**
- **This analyzer must ONLY be serviced by a GOW-MAC technician.**
- **NEVER operate the analyzer without the cover secured in place.**
- **DO NOT tamper with or try to adjust the inner workings of the analyzer Doing so will void any warranties and/or service contracts.**
- **ALWAYS turn off power and disconnect the AC power cord before servicing.**

Before consulting the troubleshooting guide in Table 5-2, ensure that the sample flow is constant and vent pressure is at atmospheric pressure.

Table 5-2 provides you with information on problems that may occur with the Series 1400. Also included are their probable causes and suggested remedies to the problem. Standard hand tools and a digital multimeter are the only equipment required for most procedures.

! IMPORTANT

If you cannot fix the problem using these guidelines, contact GOW-MAC® at (610) 954-9000 and be ready to give details regarding your installation, including the analyzer's serial number found on the identification plate located on the back panel.

The Series 1400 is manufactured in several models. Determine which model you have before proceeding. The model number is found on the serial number label located on the back of the instrument.

Table 5-2: Series 1400 Troubleshooting Guide

Problem	*Probable Cause(s)*	*Remedies*
Loss of power (no lights or DPM)	Fuse or power cord not connected.	Connect power cord or replace fuse.
DPM display is off, fuse is OK, power connected	Defective DPM.	Check. Call GOW-MAC.
Functions erratically	Power interruption.	Check for proper line voltage.
	Gas not flowing through analyzer at correct rate.	Check that gas flows at 2.0 scfh. Check for flow obstructions or faulty low flow switch.

Problem	***Probable Cause(s)***	***Remedies***
	Defective regulated power supply.	Call GOW-MAC.
DPM reads EEEEEE across the display	Loss of sample flow or flow too low.	Check that gas flows at 2.0 scfh. Check for flow obstructions or faulty low flow switch.
	Loss of ionization voltage from transformer.	Call GOW-MAC.
	Defective amplifier board.	Call GOW-MAC.
	Defective 255 Hz power supply board.	Call GOW-MAC.
Recorder offscale (top or bottom)	Improper calibration.	Repeat calibration procedure.
	No voltage or improper voltage to analytical cell.	Call GOW-MAC.
	Defective 255 Hz power supply	Call GOW-MAC.
	Defective PMT.	Call GOW-MAC.
	Defective amplifier board.	Call GOW-MAC.
	Defective high-voltage PMT socket.	Call GOW-MAC.
Recorder offscale (top or bottom) - continued	Defective low-voltage DC power supply.	Call GOW-MAC.
	Sample line leakage, improper sampling, etc.	Check sample lines for leak. If a leak is found, re-purge sample lines.
	Defective ZERO or SPAN potentiometer.	Call GOW-MAC.
Recorder drift	Analyzer not warmed up.	If analyzer recently started up, wait for warm-up.
	Sample line leakage.	Check sample lines for leak. If a leak is found, re-purge sample lines.

Problem	***Probable Cause(s)***	***Remedies***
	Invalid calibration.	Refer to page 16 for proper calibration standards.
	Analyzer or sampling system not fully purged.	Purge analyzer and sampling system ***12 or more hours*** or overnight.
	Flow not stable.	Check for flow obstructions or faulty low-flow switch.
	Weak signal.	Call GOW-MAC.
	Defective recorder.	Check recorder per supplier manual.
	Increase in pressure in analytical cell.	Check for obstructions in sample flow meter, low flow switch, or analyzer tubing (such as water in vent line). Re-purge the system if an obstruction is found.
Recorder oscillates and erratic	Improper plate voltage on PMT.	Call GOW-MAC.readings are Check calibration data supplied with analyzer.
Recorder oscillates and readings are erratic - continued	External electrical interference.	Shield to avoid stray fields caused by large motors or transformers and power lines. Ground shields.
	Recorder gain too high.	Check recorder per supplier manual.
	Ionization voltage too high.	Call GOW-MAC.
	Defective PMT.	Call GOW-MAC.
	Defective amplifier board.	Call GOW-MAC.
No signal or signal is too weak.	Faulty Hamamatsu PMT socket.	Call GOW-MAC.
	Faulty amplifier board.	Call GOW-MAC.
	Faulty low-voltage DC power supply.	Call GOW-MAC.

Problem	***Probable Cause(s)***	***Remedies***
	Open high-voltage transformer.	Call GOW-MAC.
	Faulty PMT.	Call GOW-MAC.
	Faulty analytical cell.	Call GOW-MAC.
	Dirty optical filter.	Call GOW-MAC.

5.3 Parts Replacement and Testing Guide

DANGER !

- **6000 Volts. Electrocution hazard.**
- **This analyzer must ONLY be serviced by a GOW-MAC technician.**
- **NEVER operate the analyzer without the cover secured in place.**
- **DO NOT tamper with or try to adjust the inner workings of the analyzer Doing so will void any warranties and/or service contracts.**
- **ALWAYS turn off power and disconnect the AC power cord before servicing.**

NEVER operate the analyzer without the cover secured in place. ALWAYS turn off power and disconnect AC power cord before servicing.

5.3.1 Voltage Selection and Fuse Changing

The Series 1400 Trace Moisture Analyzer can be configured for either 110 or 230 VAC line voltage.

Figure 5-1 shows the Power Entry Module with its hinged cover open for access to the fuse cartridge. (A small screwdriver can be used to gently pry open the cover from the top of the assembly.)

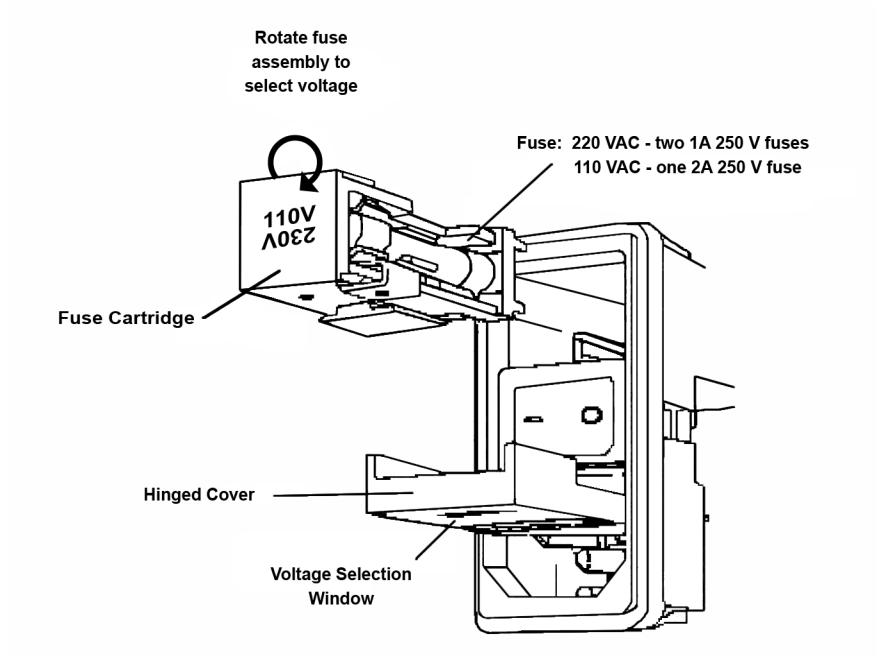

Figure 5-1: Power Entry Module

To change the selected line voltage, follow the steps outlined below while referring to Figure 5-1.

1. Ensure the AC power cord is disconnected from the unit. Then open the hinged cover to the power entry module as described above.

2. Remove the fuse assembly.

3. Check for the proper fuses [(1) 2 amp, “slow blow”, 250 V fuse for 120 VAC; (2) 1 amp, “slow blow”, 250 V fuse for 230 VAC] and replace if necessary.

CAUTION

Excessive current through the analyzer can result in equipment damage. Be sure the proper fuse is in place for the selected voltage BEFORE supplying power to the analyzer.

4. Turn the fuse assembly so that the selected voltage is right side up and shows through the voltage selection window of the power entry module.

5. Replace the fuse cartridge in the power entry module.

6. Close the power entry module hinged cover.

7. Check to see that the proper line voltage displays in the voltage selection window.

5.3.2 Low Flow Switch

To test the flow switch operation:

1. With the analyzer running, slowly decrease sample flow. As the flow falls below approximately 0.4 scfh, the Low Flow Switch should activate the relay to cut off the ionizing voltage from the transformer. When this happens, the front panel *LOW FLOW* light turns on. The *OVERRANGE ALARM* condition is also activated.

2. Slowly increase the sample flow up toward the 2.0 scfh analyzer flow rate. As the flow increases above approximately 0.5 scfh, the switch should activate the control relay to apply ionizing voltage to the analytical cell. When this happens:

   - The control relay switch activates.
   - The front panel *LOW FLOW* light turns off.
   - The *ON-LINE* light turns on.

3. If the events listed in steps 1 and 2 do not take place, either the low flow switch or the control relay is not functioning properly. Test the control relay to isolate the problem.

5.3.3 High Voltage Plate Adjustment

If the plate voltage to the PMT is too high, a non-linearity problem is experienced where gases in the midrange of the analyzer read higher than normal. If the plate voltage to the PMT is too low, the analyzer runs out of span adjustment on the front panel controls. For this reason, the plate voltage to the PMT is critical.

Each new analyzer is tested with a range of gases to determine the optimum high plate voltage for the PMT. This voltage is adjustable through the potentiometer, labeled 1P28 Plate Adjust on the rear panel of the analyzer. Adjust this voltage very carefully to eliminate non-linearity problems. It is normally only adjusted if you run out of span or zero adjustment on the front panel controls.

The regulated 255 Hz power supply output is set at 85 ± 5 VAC at the time of installation. Check this by measuring the voltage at the test point panel across the blue 90 VAC test jacks.

5.4 Service

NO ATTEMPT should be made to affect repairs to the Series 1400.

Call our Repair Department at (610) 954-9000 to receive estimate for repair, as well as an RMA number to send the instrument back to us. The completed Health and Safety declaration (GOW-MAC form REP-006, included on page 43) will be required to get the RMA number.

Display the RMA number on your shipping label to insure prompt attention upon arrival at GOW-MAC, for example:

GOW-MAC Instrument Co.
Attn: Repair Dept, RMA# _____
277 Brodhead Road
Bethlehem, PA 18017-8600

Please include a contact person, phone number, service required and a P.O. number. We are also able to furnish an estimate prior to repairs if this is required.

Health and Safety Declaration for the Return of GOW-MAC Instrument Co. Equipment

In order to protect our employees from exposure to various hazards, the following statements and/or questions **MUST** be answered by you. Fill out this document in its entirety and either fax or e-mail it to GOW-MAC Instrument Co., Attn: Repair Dept, **BEFORE** returning the product.

The instrument/part being returned **will not** be accepted into GOW-MAC's facility until we receive this completed document, along with a **PO or Credit Card**. Once approved for return by our Chemical Safety Officer, a **Return Materials Authorization (RMA) number** and shipping instructions will be issued. *All applicable regulations should be followed when returning instrumentation, and/or parts.*

Customer to Record the Following:

Model # / Part # _____

Serial #: _____

Service Technician spoken to: _____

Today's Date: _____

IF THIS FORM IS NOT APPROVED BY OUR CHEMICAL SAFETY OFFICER, THE INSTRUMENT/PART WILL NOT BE PERMITTED INTO OUR FACILITY FOR SERVICING!

A] Brief explanation of issue: _____

B] Briefly list the application(s) for which the instrument/part was used, as well as any and all chemicals, gases, and/or materials analyzed and their concentrations. (**Must be filled in**): _____

C] Is there the possibility of internal or external contamination on or in this instrument/part?

☐ Yes – see below ☐ No – proceed to D.

Please check the appropriate box.

☐ Chemicals or Substances That Are Hazardous to Health
☐ Blood, Body Fluids, (e.g. Urine, Secretions), Pathological Specimens
☐ Regulated Medical Wastes
☐ Infectious Substances or other Bio-Agents (e.g. Protein, Enzymes, Antibodies)
☐ Radioactive Isotopes used in the area. Detail type (ECD, Isotopic Labels, etc) and Activity in Micro Curies
☐ Biodegradable Material That Could Become Hazardous
☐ Other Hazards _____

If any of the above boxes are checked the following statements and/or questions must be answered.

1. Specifically describe where (on or in) the instrument/part there could be any residual contamination (for example: blood spill on the surface). _____
2. Provide details of these hazards. Include names, Material Safety Data Sheets (MSDS), and concentration of contaminants, where possible. _____
3. Describe the method of decontamination used. Attach Procedure. _____

D] I declare that the above information is true and complete to the best of my knowledge. I acknowledge that any inconsistencies between the condition of the instrument and the statements made on this form will delay the repair process.

Authorized signature _____ Date: _____

Name (Printed) _____ Phone number: _____

Company name: _____ Fax number: _____

Shipping address: _____

City: _____ State/Country: _____ Zip : _____

E-mail address: _____

BEFORE item can be shipped, fax completed form to: (610) 954-0599 or e-mail it to: repairs@gow-mac.com

For GOW-MAC Use Only: Signed: _____ Date ___/___/___

☐ **Passed** Safety Inspection. **OK** to proceed to Repair Dept. Chemical Safety Officer Comments: ( ) None

☐ **Failed safetyInspection. DO NOT** proceed to Repair Dept. **RMA No:** _____ ( ) On Back >>>>

GOW-MAC® INSTRUMENT CO.

Appendix A. Sample Equipment Calibration Log Form

EQUIPMENT CALIBRATION LOG

Manufacturer: _____ Model No. _____ Serial No. _____

Plant/Loc: _____ Tag No. _____

Accuracy Requirements: _____% Engineering Units: _____
Range: 0%: _____
100%: _____

Output: 0%: _____ Output Units: _____ Calibration Frequency: _____
100%: _____

Date M/D/Y	As Left Zero	As Left Span	Calibration Std/Test Equipment (Std/Ser #)	Checked Calib by (signature)	Passed Calibration	Comments

Appendix B. Sample Rotameter Correction